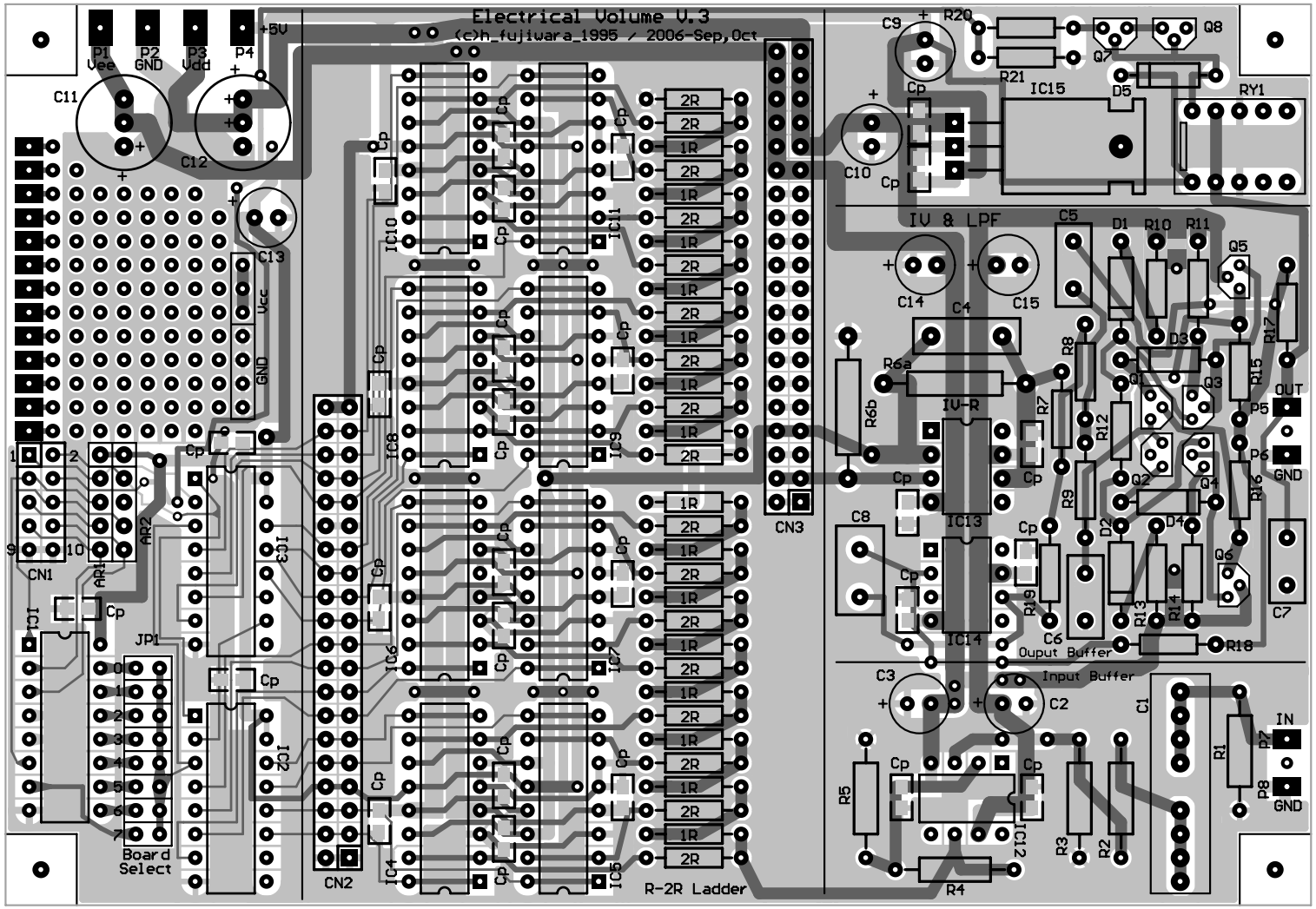
Electrical Volume V.3
(c)h_fujiwara_1995 / 2006-Sep,Oct
P1 Vee
P2 GND
P3 Vdd
P4 +5V
C11
C12
C13
Vcc
GND
CN1
AR1
AR2
JP1
Board Select
CN2
CN3
IC1
IC2
IC3
IC4
IC5
IC6
IC7
IC8
IC9
IC10
IC11
IC12
IC13
IC14
IC15
Cp
2R
1R
R-2R Ladder
IV & LPF
IV-R
R6a
R6b
C4
C5
C6
C7
C8
C9
C10
C14
C15
R20
R21
Q1
Q2
Q3
Q4
Q5
Q6
Q7
Q8
D1
D2
D3
D4
D5
R7
R8
R9
R10
R11
R12
R13
R14
R15
R16
R17
R18
R19
OUT
P5
P6
GND
Ouput Buffer
Input Buffer
C3
C2
C1
R5
R4
R3
R2
R1
IN
P7
P8
GND
RY1

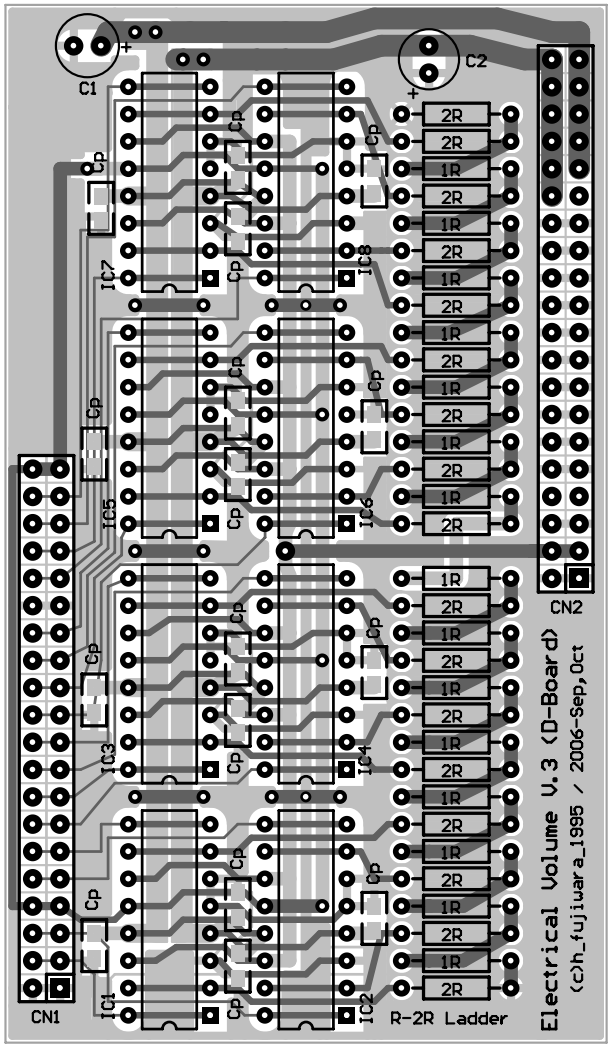
C1
C2
CN1
CN2
IC1
IC2
IC3
IC4
IC5
IC6
IC7
IC8
Cp
2R
1R
R-2R Ladder
Electrical Volume V.3 (D-Board)
(c)h_fujiwara_1995 / 2006-Sep,Oct