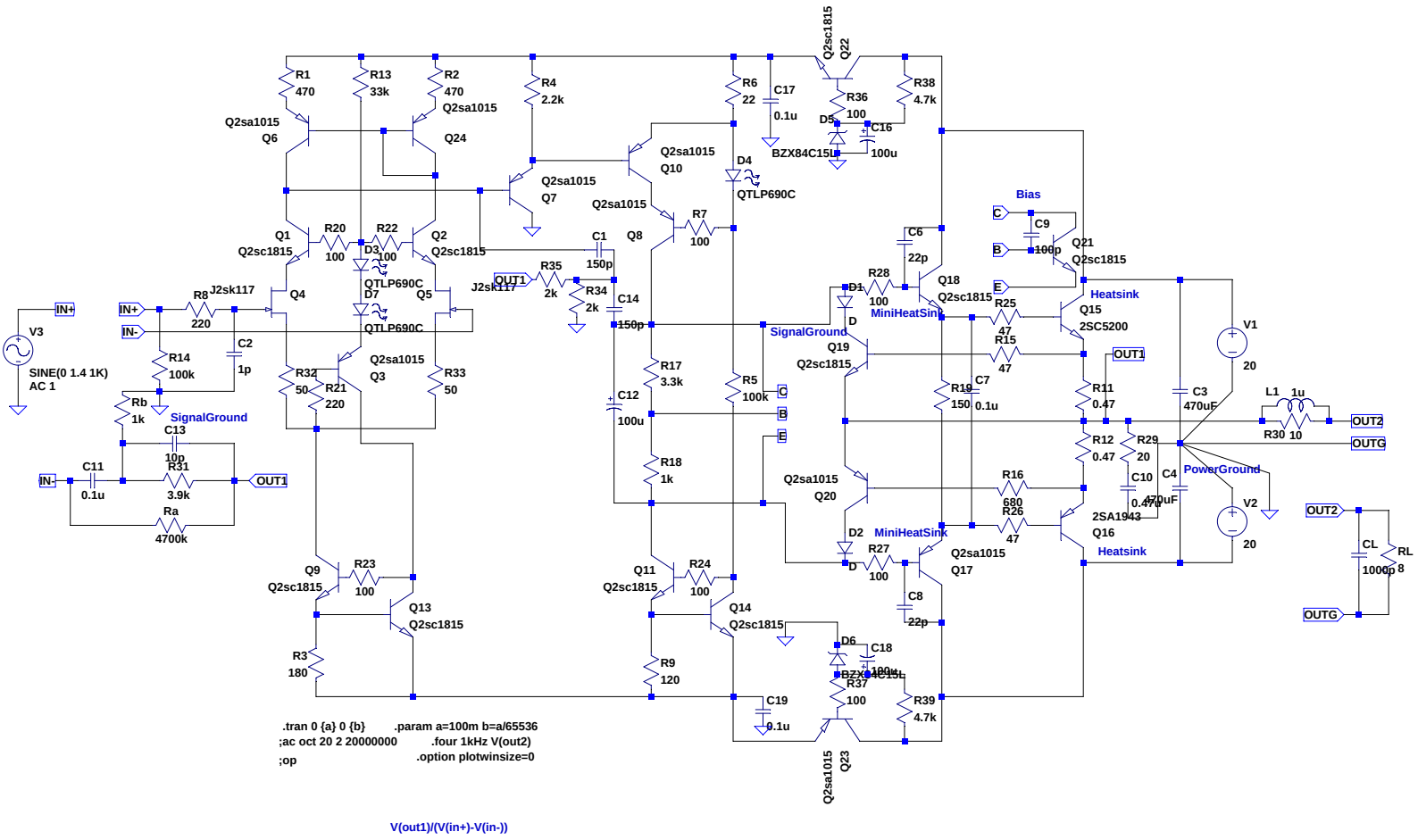

--- C:\Documents and Settings\hiro\Local Settings\Temporary Internet Files\Content.IE5\YBSO06F1\?VHPA_Ver2.asc ---