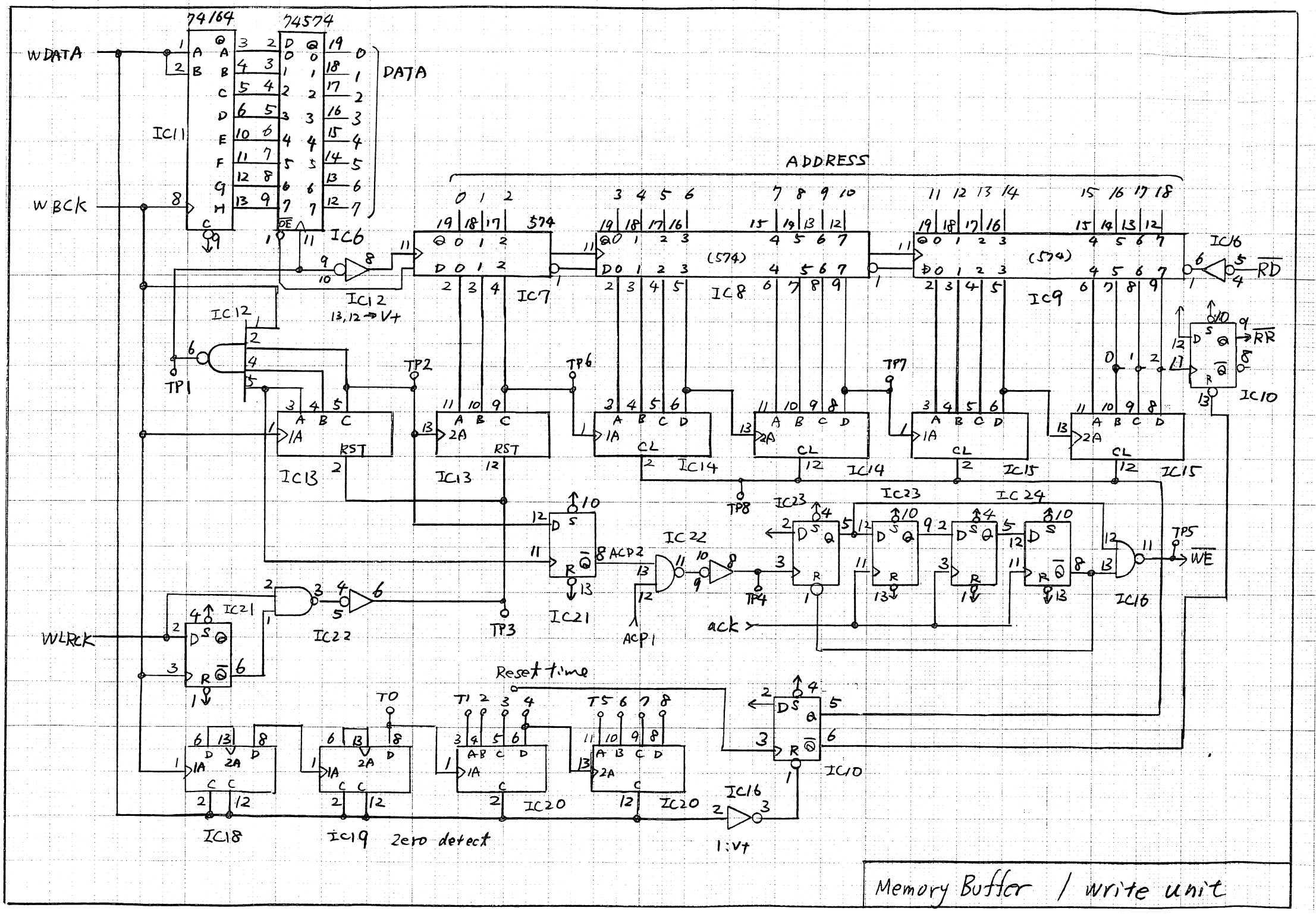

Memory Buffer / write unit